IARPotHP

INTERNATIONAL ASSOCIATION FOR RESEARCH
ON POTTERY OF THE HELLENISTIC PERIOD E. V.



Manufacturers and Markets
The Contributions of Hellenistic Pottery to Economies Large and Small

Edited by Laura Rembart and Alice Waldner

Wien 2022

IARPotHP

International Association for Research on Pottery of the Hellenistic Period e. V.

Volume 4

MANUFACTURERS AND MARKETS

The Contributions of Hellenistic Pottery to Economies Large and Small

Proceedings of the 4th Conference of IARPotHP,
Athens, November 2019, 11th–14th

Edited by Laura Rembart – Alice Waldner

Offprint

Phoibos Verlag, Wien 2022

Pottery from Orneai in the Western Argolid (4th cent. BCE – 2nd cent. CE)

Melanie Godsey – Machal Gradoz

Abstract

The recent archaeological survey of the western Argolid provides new data concerning networks of connectivity in the eastern and central Peloponnese and routes of social and economic exchange from the Neolithic to Modern eras. This chapter presents the pottery of the late Classical to early Roman periods (ca. 450 BCE to 150 CE) found at the site of Orneai, a *polis* on the route between the Argolid, Arkadia, and the western Corinthia. The evidence for local ceramic production and import patterns demonstrates that Orneai remained a hub of activity for more than five centuries. In addition, it appears that the local potters responded to external influences that reflect Orneai's status as a nodal point along important routes in and out of the Argolid.

Introduction

The Western Argolid Regional Project (WARP) is an intensive, diachronic pedestrian survey that held three field seasons from 2014 – 2016[1]. The project surveyed 18.33 km^2 in the upper Inachos River Valley (northwest of the city of Argos) (fig. 1), seeking to answer questions about the nature of connectivity between this region and the rest of the Peloponnese over time[2]. Though Argos is understood today as an important center throughout Greek history, the archaeology of its western hinterland has been largely neglected. Data from WARP are beginning to address this lacuna by providing insights into socioeconomic relationships at the local and supraregional levels. For the Classical and Hellenistic periods, ceramic artifacts collected by the survey enabled the creation of a local, western Argolid typology, which we present here for the first time. This research contributes to regional ceramic studies and to our understanding of how the ceramic assemblages of the northwestern Argolid were integrated into the neighboring ceramic traditions of the contemporary Peloponnesian *koine*.

The mid-5th cent. BCE to mid-2nd cent. CE was the most active time in the northwestern Argolid, with a quantitative peak in artifact density during the Classical-Hellenistic (ca. 450–50 BCE) period[3]. Historical sources attest to significant political, economic, and social change during this period – thus the archaeological evidence can be easily contextualized into the broader regional narratives. The pottery from the largest site in the survey area, the *polis* of Orneai, provides a robust dataset to assess connectivity between the western Argolid and the surrounding regions. Furthermore, the continuity of place and activity at the largest site in the western Argolid demonstrates the persistence of local settlements, despite the political changes that occurred after the Roman conquest of Greece[4].

Much of the previous scholarship on the western Argolid has focused on the fortunes of Orneai, which lies on the north side of the Lyrkeia Valley near the mountain passes connecting the Argolid to Arkadia and the western Corinthia[5]. Orneai's strategic location on the upper slopes of

1 The authors would like to thank the WARP directors and team for eight years of support and camaraderie, and especially Dr. Sarah James for her mentorship in the field and in the preparation of this paper.

2 Rupp et al. 2017, 184–188; Gallimore et al. 2017, 422–423; Rupp et al. 2018, 311–313; Rupp et al. 2019, 358–360.

3 James et al. forthcoming.

4 Alcock 1993; Bintliff 2008; Stewart 2013; James 2020.

5 Pikoulas 1995, 267–270; Piérart 2004, 612.

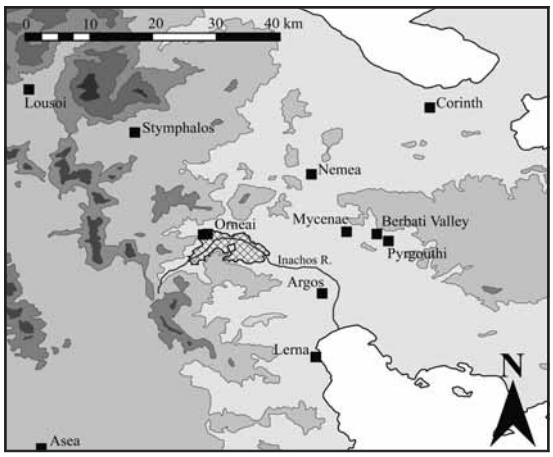

Fig. 1: Map of the WARP Survey Area and Relevant Sites in the Northeast Peloponnese

the valley made it a nodal point in the landscape attracting human activity from the Early Bronze Age to the Medieval-Ottoman period[6]. Dense ceramic scatters illuminate an extensive settlement at its height in the late Classical to early Hellenistic periods that also spread laterally onto neighboring slopes and down into the valley to the bank of the Inachos river[7]. Beyond its small, fortified acropolis of Kastro-Orneai, activity can be traced up to a secondary set of long walls to its northeast towards the fortified hill of Sportiza. The following discussion focuses on a representative sample of pottery from survey units across the site of Orneai (ca. 1.2 km²), including the acropolis and adjacent slopes.

Chronology and Chronotypes

WARP employed the Chronotype system developed by the Sydney Cyprus Survey Project to assign sherds to a range of categories that bridge historical periodization and reflect regional artifact chronologies based on published assemblages from excavations[8]. The aim of the bridge chronotypes is to span standard historical definitions of periods that do not necessarily apply to material culture. The present study uses pottery from the following chronotypes: Classical-Hellenistic, Hellenistic, late Hellenistic-early Roman, and early Roman (Table 1).

Archaic-Classical	700–300 BCE
Classical	450–300 BCE
Classical-Hellenistic	450–50 BCE
Hellenistic	300–50 BCE
Late Hellenistic-early Roman	150 BCE–150 CE
Early Roman	50 BCE–150 CE
Middle Roman	150–400 CE
Roman	50 BCE–400 CE

Table. 1: Chronotypes for the mid-5th cent. BCE to the mid-2nd cent. CE

Artifacts assigned to the Classical-Hellenistic chronotype consist of table, cooking, and utilitarian wares that have Classical antecedents and do not continue into the Roman period. Conversely, the Hellenistic chronotype is more chronologically exclusive. It includes some closely-datable imported transport amphoras and a few table vessels, like echinus bowls, kantharoi, and certain types of oinochoai that manifested specific characteristics only in the Hellenistic period. The Classical-Hellenistic and Hellenistic chronotypes are discussed together below, since, in many instances, vessels cross over the two chronotype periods, yet are distinct from those that belong to either the Classical or late Hellenistic-early Roman chronotypes.

The late Hellenistic-early Roman chronotype encompasses ceramic shapes that originated in the Hellenistic period and persisted into the first centuries BCE and CE, such as certain types of bowls, pitchers, stewpots, casseroles, and lekanai. Vessels assigned to this chronotype also in-

6 For discussion of the history of Orneai see Piérart 2004, 612–613; Gallimore et al. 2017; James et al. forthcoming.

7 For Sportiza, see Caraher et al. in prep.

8 Given – Knapp 2003; Gregory 2004; Moore 2008. For periods in which ceramics are less readily recognized on archaeological survey, rigid periodization and categorization might contribute to a false "gap" in data, see, for example, Pettegrew 2007 (early Roman); James 2020 (late Hellenistic).

clude new types, such as new plate forms and imported sigillatas, imitations of which continued in local production beyond the Roman conquest.



Fig. 2: Kiln on the slopes of Orneai. Photo by D. Nakassis.

Ceramic Production in the Western Argolid

WARP collected approximately 5,000 sherds from the highest density units around Orneai, the majority of which were likely produced in the western Argolid. A Classical-Hellenistic kiln was documented near the acropolis (fig. 2) and many tile wasters were found throughout the survey area, providing a clear indication of some degree of localized production in this period[9]. Additional evidence comes from macroscopic analyses of the ceramic fabrics represented in the surface material, which show a great degree of homogeneity in most periods. This homogeneity is in sharp contrast with the distinctive fabrics of clearly identifiable imports from other known centers[10].

The typical western Argolid fabric used for fine, coarse, and cooking wares is fired to a light red (2.5YR 6/6–6/8) to reddish yellow (5YR 6/5–7/6) or very pale brown (10YR 8/4)[11]. The fabric typically consists of subangular to subrounded red and white, occasionally with subangular to subrounded gray and more rarely fine sparkling inclusions. The uniformity of the fabrics here indicates that pottery at Orneai was produced from the same (or very similar) raw materials and that production practices, from tempering to firing, remained mostly consistent[12].

Two features of local production have potential as chronological indicators: the coarseness of the fabric and the quality of the glaze among the local table ware. First, the coarseness of the fabric seems to increase over time from the 5th cent. BCE to the 2nd cent. CE. This is particularly apparent in bowls, pitchers, and lekanai. Similarly, the use of a moderately well-adhering shiny black (5YR 2.5/1) glaze is common in the late 5th and 4th cent., but the quality of the glaze deteriorates throughout the 3rd cent. to a dull gray color (2.5Y 4/1), which is often not preserved on the vessels found on the modern surface. Poorly-adhering glaze is also a feature of the sherds assigned to the late Hellenistic-early Roman chronotype. When preserved, the glaze can be unevenly fired from a dull black (GLEY1/2.5N) to a pale brown (10YR 7/4). Other late Hellenistic-early Roman sherds indicate experimentation with red glaze, including open and closed forms with mottled black and red glaze or a flaking red glaze.

Pottery of the Classical-Hellenistic and Hellenistic Periods from Orneai

Pottery assigned to the Classical-Hellenistic (ca. 450–50 BCE) and Hellenistic (ca. 300–50 BCE) chronotypes dominate the surface assemblage at Orneai, and nearly all ceramic finds were likely produced in the northwestern Argolid. An abundance of local products, alongside a small number of Attic imports datable to the 4th and early 3rd cent., is a common trend among contemporary assemblages of the surrounding regions. Differences in the local assemblage can be seen even within the Argolid peninsula where excavated material from Argos[13] has more in com-

9 Gallimore et al. 2017, 429. WARP catalogue numbers 4348S.3a–b are samples of wasters. A petrographic study of the survey pottery, conducted by Edyta Marzec at the Fitch Laboratory, is underway.

10 Fragments of Attic, Corinthian, and Argive pottery of the 6th–2nd cent. BCE have been identified in the WARP survey area and contrast sharply with the predominant fabric described here.

11 Cf. 1–4. 8–10 (reddish yellow); 6. 12. 14 (light red); 23 (very pale brown).

12 Whitbread et al. 2007 discuss this and other basic methods in provenance studies. A similar situation occurs in the Berbati Valley in the Classical–early Roman periods. See: Whitbread et al. 2007, 185; Whitbread 2011.

13 Kolia 2000; Banaka-Dimaki 2004; Alexandropoulou 2016; Ackermann 2019.

mon with ceramic traditions of the eastern Argolid[14] than with the southern Argolid[15]. Orneai is no exception. Its assemblage is most similar to that of Argos, but with distinct differences from other parts of the Argolid.

The drinking assemblage at Orneai seems to fit within broader trends in the Peloponnese. Attic-type skyphoi are the most popular drinking shape at Orneai, with larger examples from the earlier 4th cent. (e.g., cat. 1) and others with a smaller diameter at the foot and body from the late 4th or first half of the 3rd cent. Although common in Corinth and Athens, kantharoi are rarer elsewhere in the Peloponnese including Orneai. Other drinking vessels include one-handled cups[16] and a black-glazed body sherd with vertical ribbing. Incised ribbing is found on Attic-type skyphoi in Argos and the Asea Valley in Arkadia and on the lower bodies of cyma kantharoi in Corinth in the early Hellenistic period[17]. This cup fragment at Orneai suggests that local potters were engaging with regional styles by employing a decorative technique that is frequently found on drinking shapes in other parts of the Peloponnese[18].

Bowls are the best represented type of table vessel found at Orneai. Locally-made echinus bowls are very common and tend to be small (avg. diam. 0.10 m). The earliest examples date to the late 4th cent., based on the high-quality black glaze covering the entire vessel. Third- and second-century echinus bowls at Orneai were partially glazed by dipping, similar to those found at Corinth (e.g., cat. 2)[19]. Bowls with outturned rim are also a common shape in the local repertoire starting in the 4th cent. One bowl with an outturned rim (cat. 3) has numerous parallels with other mid-4th cent. assemblages in the Peloponnese. The general form of this bowl persists into the 1st cent. BCE (e.g., cat. 22).

Well-known types of Classical and Hellenistic pouring vessels are also found at Orneai in local fabrics. Small oinochoai have either a 4th-century style high foot with a button on the undersurface[20] or a 3rd-century raised disc base[21]. Larger pitchers are mostly represented by plain ring feet and were a significant part of the local assemblage.

Large open vessels, such as large bowls and kraters in a relatively fine local fabric, had close connections to other central Peloponnesian workshops. For example, a flaring rim bowl with a diameter of 0.14 m is a type attested in late Classical contexts in the Asea Valley and at Olympia[22]. A second type, a deep bowl with an overhanging rim, likely with two horizontal handles (e.g., cat. 4), was not made in the major centers of Hellenistic pottery production in the Greek Mainland, such as Athens and Corinth[23]. Instead, they are best represented in Argos, Lerna, the Asea Valley, and in a non-local fabric in Corinth. Unlike the smaller bowls that are among the most common shapes in the Classical-Hellenistic ceramic *koine,* these larger bowls belong within a more localized central Peloponnesian tradition. A similar connection is found in a small krater (cat. 5) of a type also found in 4th and 3rd cent. BCE Lerna and Sparta. Krater fragments were found across Orneai and were identified primarily by their tall ring feet (avg. diam. 0.13 m), characteristic of wider Peloponnesian production[24].

14 Abadie-Reynal – Spyropoulos 1985; Danali 1994.

15 Dengate 1976; Rudolph 1984; Jameson et al. 1994.

16 Cf. Forsén – Forsén 2003, 216 fig. 137 no. 239; James 2018, 156 fig. 1 pl. 1 no. 3.

17 Cf. Attic-type skyphoi from Helleniko (Abadie-Reynal – Spyropoulos 1985, 493 fig. 32) and the Aspis (Ackermann 2019, 231 fig. 6 no. A9) in the Argolid, as well as an unidentified cup from the Asea Valley (Forsén – Forsén 1993, 217 no. 248). For vertical ribbing on cyma kantharoi at Corinth, see James 2018, 86 (e.g., no. 55–56).

18 Cup-kantharoi produced in Athens also have similar diameters and vertical ribbing (e.g., Rotroff 1997, 252 pl. 10 fig. 9 no. 98), but are not often imitated in the Peloponnese.

19 McPhee – Pemberton 2012, 106; James 2018, 32.

20 E.g., Cloke 2016, 690 fig. I.208.

21 For this base type at Corinth, see James 2018, 190 fig. 42 pl. 36 no. 306.

22 Forsén – Forsén 2003, 208 fig. 135 no. 163; Schilbach 1995, 48–50 pls. 38,4–10; 42,3–4.

23 Ackermann 2019, 233.

24 The plain foot is similar to Erickson 2018, 182–183 fig. 151 nos. 316–317; James 2018, 187–188 fig. 37 pl. 33 no. 284.

Cooking wares found at Orneai include flanged and unflanged stewpots, casseroles, and lids, which were common types at sites throughout the Hellenistic Mediterranean. Unflanged stewpots, like the large example at Orneai (e.g., cat. 6) are the most common cooking vessel found in the Asea Valley and in early Hellenistic Corinth[25]. Like elsewhere in the Argolid[26], the stewpot and casserole forms do not experience much change throughout the Classical-Hellenistic and Hellenistic periods.

Utilitarian wares consist mostly of lekanai and mortaria. Throughout the Peloponnese, these two ceramic shapes were standard components of any urban or rural domestic space. Two varieties of lekane rim were found at Orneai in the Classical-Hellenistic period. One has a plain outturned rim and others have a square collar-like rim (e.g., cat. 7), similar to rims found at Lerna. A mortar of "peaked-rim" type has late Classical and Hellenistic parallels throughout the region[27], but the one at Orneai (cat. 8) can be dated more specifically to the mid-4th cent. BCE based on parallels from Lerna.

Storage vessels found on Orneai include numerous hydriae (e.g., cat. 9) and pithoi. Rims on the Classical-Hellenistic (and Hellenistic) pithoi vary considerably, ranging from those with tall (e.g., cat. 10) and short (e.g., cat. 11) triangular collar rims to ones with squared collar rims (e.g., cat. 12–13). Pithos bases typically have a high solid vertical foot with a concave underside (e.g., cat. 14). The abundance of pithoi across the site reflects an era of intensive settlement, while the similarity of their fabric to tile wasters found by the survey indicates that these too were locally produced.

Special use objects were also part of the assemblage, including lekanides, perirrhanteria or louteria (e.g., cat. 16), and conical loomweights[28]. Lekanides are represented by lids (e.g., cat. 15) that are unglazed or have a very light slip, a type which is common in Argos and Corinth. Imported transport amphoras are rare among the surface assemblage at Orneai, but include Classical-Hellenistic Corinthian B-type amphoras, a Hellenistic Knidian amphora (cat. 17) and a fractional Rhodian amphora (cat. 18). These amphora types are frequently found in excavations throughout the central and eastern Peloponnese, and southern Greece more broadly. Despite their rarity, transport amphoras are the most common Classical and Hellenistic imports at Orneai.

The Classical-Hellenistic and Hellenistic assemblages at Orneai attest to the thriving domestic life in a *polis* in the shadow of Argos. More significantly, they illustrate how, like its physical situation in the landscape, the region's pottery sits at the crossroads of the ceramic traditions of the northern Argolid, Arkadia, and, to a lesser extent, the Corinthia. Many of the storage, utilitarian, and industrial shapes are common elsewhere in the Peloponnese and southern Greece. The local table wares, however, more often resemble vessels found in the Argolid and Asea Valley rather than looking to the north and east to major production centers like Corinth and Athens.

Pottery of the Hellenistic-Early Roman Period from Orneai

Although there is a significant reduction in the number of artifacts at Orneai assigned to the late Hellenistic-early Roman chronotype (see table 1), the WARP data suggest continuity into the 2nd cent. CE in terms of artifact spatial distribution at the site and basic components of the assemblage. Most of the material collected by the survey appears to be local, having been produced in the same fabrics as those assigned to the Classical-Hellenistic and Hellenistic chronotypes. Pitchers, stewpots, casseroles, and lekanai are shapes from the Hellenistic period that were produced into the 1st cent. BCE and slightly later. At the same time, there are changes in the assemblage after the mid-2nd cent. BCE. First, there is a significant decline in drinking vessels and an

25 E.g., Forsén and Forsén 2003, 222–223 fig. 139, nos. 278–280; Erickson 2018, 265 fig. 233, nos. 567; 307 fig. 290 no. 711; McPhee – Pemberton 2012, 87–90 figs. 16–17 nos. III-47-60.

26 For Lerna, see Erickson 2018, 294.

27 Villing – Pemberton 2010, 582–589.

28 For 4th–3rd cent. Argive loomweights, see Erickson 2018, 339–340. 365–366 fig. 335 nos. 865–869.

increased interest in plates and bowls. Secondly, imported table wares from the eastern Mediterranean appear for the first time at Orneai.

Eastern sigillatas are found at sites in the Corinthia, Arkadia, and the Argolid beginning in the second quarter of the 2nd cent. BCE, and are the most commonly identified imports at Orneai[29]. Two ESA plates (cat. 19–20), one Hayes form 3 and one form 4, date to the end of the 2nd cent. BCE-early 1st cent. CE. Slightly later in date is an ESB form 60 plate (cat. 21) – an early version with a less pronounced rim (mid-1st cent. CE). Additionally, there is a fragment of a Çandarlı bowl, either a form L19 or H3[30].

Other Hellenistic-Early Roman table wares found at Orneai include bowls (especially the bowl with outturned rim), plates, and pitchers. Bowls with outturned rims were produced from at least the 4th cent. BCE (e.g., cat. 3) and continued to be a popular shape into the 1st cent. BCE in Mainland Greece[31]. A later example from Orneai (cat. 22) has a pronounced rounded outturned rim, which is a common regional form of the 3rd–1st cent. BCE, and indicates local production of this type for several centuries.

Local production of plates is attested by a rolled-rim plate (cat. 23), although imported plates were more commonly collected at Orneai. This is a regional form, with parallels at Sikyon, Corinth, and Stymphalos, but was not widely popular in the 2nd–1st cent. BCE[32]. Many body sherds of pitchers were collected and identified, demonstrating that they were also an important part of the local assemblage in this period. A few diagnostic sherds indicate they had cylindrical necks and flaring or horizontal rims. This profile is common for late-Hellenistic-early Roman pitchers in the northeast Peloponnese and suggests this shape in the western Argolid was part of a relatively stable tradition through the mid-2nd cent. CE[33]. In addition, a few fragments of locally-made lagynoi, with close parallels to ones found in Argos and Berbati, were recovered[34].

The cooking ware assemblage of Orneai is related to that of the Classical-Hellenistic and Hellenistic period and did not change significantly during the mid-2nd cent. BCE-mid 2nd cent. CE. Stewpots and casseroles remained the preferred cooking shapes and were produced in the same fabric used in the Classical-Hellenistic periods. In addition, the stewpots and casseroles from Orneai are types known from around the Mediterranean (including other northeast Peloponnesian sites). For example, cat. 24, an unflanged stewpot (similar to 7 above, but with a narrower neck and flaring rim), is close in profile to an example from Lousoi, but also similar to Hellenistic Athenian stewpots (Rotroff form 1)[35]. Flanged stewpots of this period were not recovered at Orneai but were found at other locations in the survey area. Casseroles (e.g., cat. 25) typically have a small flange and a short, convex squared lip. This type is similar to Hellenistic Athenian lopades (Rotroff forms 4 and 5)[36]. The presence of these cooking types at Orneai is good evidence for the site's connection to a wider ceramic *koine* at this time, but also to regional trends in cooking wares. An imported frying pan lid, possibly from the eastern Aegean or Asia Minor on the evidence of its micaceous fabric, is another category of import that is new to this period.

29 E.g., Argos: Abadie-Reynal 2005, 38–39; Corinth: Hayes 1973, 450–552; Slane 1990, 221; James 2020; Sikyon: Stone 2020, 228; James 2021, 354–356; Lousoi: Mitsopoulos-Leon 2017, 44. 88–90. Though ESA is not uniformly present in the 2nd cent. BCE at these sites, it is by the 1st cent. BCE.

30 Hayes 1985, 76 pl. XVII 5–7 (L19); 78 pl. XVIII 3 (H3).

31 E.g., Sikyon, Corinth, and Athens. Sikyon: James 2021, 331 fn. 65; Athens: Rotroff 1997, 156. See also James 2021, 322 fn. 48 for a comprehensive list of Mediterranean sites with this shape.

32 Stone 2014, 204. 210; James 2018, 118–120; James 2021, 330–332; Stone 2020, 226–227.

33 For instance, at Argos: Abadie-Reynal 2007, 229 pl. 62 no. 394.1; and at Corinth: Williams – Zervos 1983, 20 pl. 9 no. 52.

34 See Abadie-Reynal 2007, 279 pl. 60 no. 379; Penttinen 2005, 46–47 fig. 31 no. 100. The Argive example, however, is likely an import from Asia Minor.

35 A similar vessel at Lousoi: Mitsopoulos-Leon 2017, 125 pl. 46 no. 197; Athens: Rotroff 2006, 167–169. She identifies this common shape as a Form 1 Chytra.

36 Rotroff 2006, 183–186 figs. 84–85 pl. 69 no. 663–671. This shape is also well-known in the northeast Peloponnese, see n. 26 above.

Utilitarian shapes like lekanai and deep bowls are further evidence for continuity of production from the Classical-Hellenistic period into the 2nd cent. BCE and later at Orneai, a pattern also found across the northeast Peloponnese at this time[37]. They were produced in the same fabric and usually have simple profiles with flaring, squared rims. As with the cooking wares, these were widely-produced forms, including at Lousoi, Pyrgouthi, Argos, and Athens[38].

The late Hellenistic-early Roman ceramic assemblage from Orneai illustrates not only sustained occupation from the Hellenistic period into the Roman period, but also demonstrates continuous production of many shapes from the 3rd cent. BCE onwards. Although drinking cups seem to have largely disappeared from the assemblage, bowls, stewpots, casseroles, and lekanai – elements of a wider Greek *koine* continuing from the Hellenistic period – remained an integral part of life at Orneai. At the same time, the appearance of imported eastern table wares, along with the introduction of new shapes, indicate both access to new products and a shift in local tastes. Local potters produced regional favorites, such as the rolled-rim plate, which represent a change in preference apparent at other sites in the northeast and other parts of the Peloponnese. Thus, the late Hellenistic-early Roman assemblage at Orneai is reflective of regional trends and new access to trade networks and their products, as well as continuity in ceramic production from the Classical-Hellenistic period.

Conclusions

The surface material collected by WARP demonstrates that Orneai was a thriving hub of activity from the mid-5th cent. BCE to the mid-2nd cent. CE. A vibrant, local ceramic industry, products of which make up nearly all of the artifacts recovered from this period, appears to have continued into the early Roman period. Persistent ceramic traditions manifested through sustained production of the bowl with outturned rim, unflanged stewpot, casserole, and lekane. Furthermore, the variety of functional categories in the assemblage, i.e., drinking, serving, pouring, cooking, and utilitarian vessels, was unchanged, suggesting a strong degree of stability in the types of activities that occurred at Orneai from the most intense period of occupation through the early centuries of Roman rule.

Table ware production and consumption patterns responded in some degree to Orneai's external contacts resulting from its location along intersecting thoroughfares between the central and eastern Peloponnese. Like in Argos and Lerna, at Orneai most table wares of the mid-5th to mid-2nd cent. BCE were locally produced, not imported from major centers in southern Greece. Strong connections to the assemblages of Classical-Hellenistic Argos and the Asea Valley suggest Orneai was participating in the central Peloponnesian *koine* that was distinct from trends in Corinth and Athens. Around 150 BCE, locally produced plates and bowls along with an increase in imported table wares indicate a broader sphere of interaction, expanding beyond Arkadia and the northern Argolid to the Corinthia and major sigillata production centers. ESA was found throughout the Greek mainland, but ESB and Çandarlı are types especially common in the northeast Peloponnese[39]. The ceramic material from Orneai, therefore, demonstrates how even a small *polis* in the northwestern Argolid fits into the broader scope of continued ceramic production and trade in the late Classical to early Roman Peloponnese and beyond.

37 Stone 2020, 227–228; Tzavella 2020, 257–258.

38 Lousoi: Mitsopoulos-Leon 2017, 110 pl. 39 no. 164; Pyrgouthi: Penttinen 2005, 45–46 fig. 34 no. 104; Argos: Abadie-Reynal 2007, 204 pl. 50 no. 338; Athens: Rotroff 2006, 113. 275 fig. 48 pl. 39 no. 280.

39 Other kinds of widely-exported Roman wares, like Italian sigillata and thin-walled wares, found at other sites in the region were not recovered from Orneai but were found elsewhere in the WARP survey area.

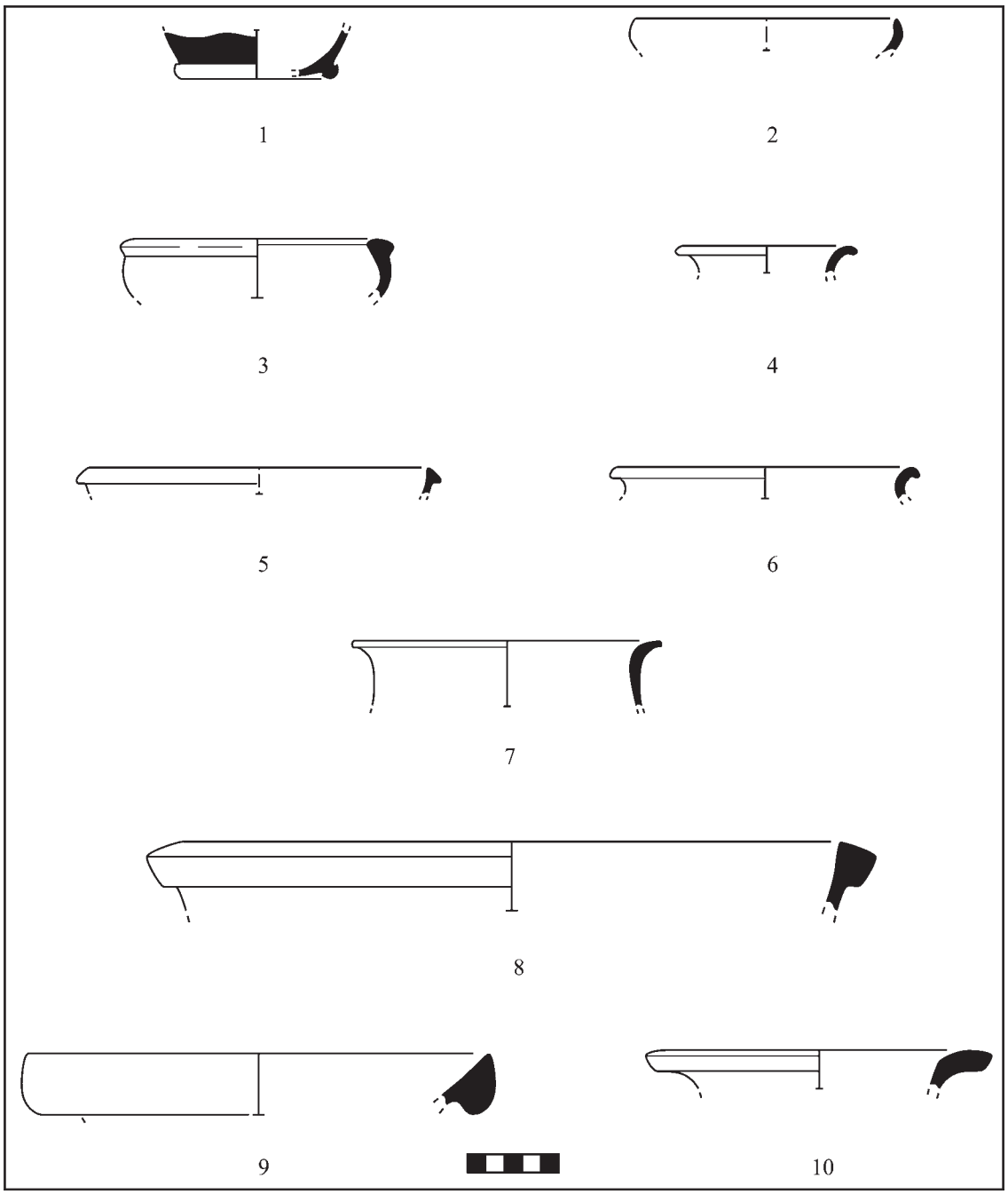

Fig. 3: Classical-Hellenistic and Hellenistic Fine, Cooking, and Coarse Vessels. Drawings by Christina Kolb.

Catalogue

Classical-Hellenistic and Hellenistic

1 Attic-Type Skyphos [4345S.20; Classical-Hellenistic] Fig. 3
Max. p. dim. 0.06; rest. Diam. base 0.09. 5YR 7/6 (reddish yellow). Soft. 2% well-sorted fine sand inclusions; rare rounded spherical and tabular gray inclusions; no voids. Convex body, slightly flaring torus ring foot, flat undersurface and resting surface. Traces of black (5YR 2.5/1) glaze on exterior. Similar to Erickson 2018, 248–249 fig. 225 no. 535.

2 Echinus Bowl [1306G.14; Classical-Hellenistic] Fig. 3
Rest. Diam. 0.15. Fabric as **1.** Echinoid body and tapered rounded lip. Black-glazed. Similar to Forsén – Forsén 2003, 211 fig. 136 no. 201; James 2018, 174 fig. 24 pl. 20 no. 157.

3 Bowl with Outturned Rim [1304G.11; Classical-Hellenistic] Fig. 3
Diam. 0.15; Max. p. Dim. 0.053. 5YR 7/6 (reddish yellow). Medium-hard. 2% fine sand inclusions, rare rounded and angular spherical red and gray inclusions; few small rounded and angular tabular voids. Convex body and slightly-out-

turned rim. Similar to Forsén – Forsén 2003, 213–214 fig. 136 no. 208; McPhee - Pemberton 2012, 128 fig. 21 pl. 17 no. IV-43.

4 Bowl with Overhanging Rim [2515G.1; Classical-Hellenistic] Fig. 3
Rest. Diam. 0.20.; Max. p. Dim. 0.009. Fabric as **1.** Convex wall and overhanging rim. Black-glazed. Similar to Ackermann 2019, 232–233, no. A15, fig. 6; Erickson 2019, 235, no. 492, fig. 212; Forsén – Forsén 2003, 213–215 fig. 136 nos. 204–205; McPhee – Pemberton 2012, 115 fig. 22 pl. 18 nos. IV-53–54.

5 Krater [1301G.5; Classical-Hellenistic] Fig. 3
Rest. Diam. 0.17; Max. p. Dim. 0.047. 2.5YR 6/6 (light red). Medium hard with 2 % fine to coarse sand moderately-sorted inclusions; few rounded spherical white inclusions; rare subrounded spherical and tabular white and gray inclusions; few small rounded voids. Everted rim with rounded lip and shallow ridge below rim. Similar to Erickson 2018, 265 fig. 244 no. 581.

6 Unflanged Stewpot [2312S.6; Classical-Hellenistic] Fig. 3
Rest. Diam. 0.18.; Max. p. Dim. 0.081. 5–2.5YR 5/3 (reddish brown). Medium-hard. 10 % poorly sorted fine to medium sand; frequent fine to small subrounded white and light gray inclusions, rare medium round milky white inclusions, and rare small voids. Concave body and horizontal rim with tapered rounded lip. Similar to Ackermann 2019, 233 fig. 7, A18; Pemberton et al. 1989, 187 pl. 59 no. 651.

7 Lekane [1446G.1; Classical-Hellenistic] Fig. 3
Rest. Diam. 0.33; Max. p. Dim. 0.85. 5YR 7/6 (reddish yellow). Medium-hard. 20 % moderately sorted fine sand to coarse sand inclusions; frequent angular to subounded gray and red inclusions; rare subangular voids. Convex body and square collar rim. Similar to Erickson 2018, 224 fig. 198 nos. 459–460; 252 fig. 229 no. 554; 277 fig. 259 no. 625

8 Mortar [917G.13; Classical-Hellenistic] Fig. 3
Rest. Diam. 0.26. 5YR 6/6 (reddish yellow). Hard. 5 % well sorted fine sand inclusions; rare subrounded opaque and milky white inclusions; few angular to subrounded pink, gray, and light brown inclusions; common silver sparkling inclusions; few subrounded voids. Convex body and outward thickened rim. Similar to Erickson 2018, 357 figs. 331–332 no. 853; Villing – Pemberton 2010, 585 fig. 15 no. 31.

9 Hydria [383S.9; Classical-Hellenistic] Fig. 3
Rest. Diam. 0.16. Fabric as **8.** Convex body with flaring rim with squared edge. Similar to Forsén – Forsén 2003, 222 fig. 138 no. 275; Mee – Forbes 1997, 210 fig. 11.74 MS220.19.

10 Pithos with Triangular Collar Rim [1284G.2; Classical-Hellenistic] Fig. 4
Rest. Diam. 0.71. 7.5YR 7/4 (pink). Medium-hard. 50 % poorly sorted fine sand to very coarse sand inclusions; common angular to subrounded milky gray inclusions; frequent angular to subrounded red and brown inclusions, rare subrounded opaque white inclusions; few angular to subrounded voids. Vertical wall and tall triangular collar rim. Similar. to Erickson 2018, 253–254 fig. 231 no. 561.

11 Pithos with Triangular Collar Rim [3311S.1; Classical-Hellenistic] Fig. 4
Rest. Diam. 0.37; max p. Dim. 0.067. 2.5YR 6/8 (light red). Fabric as **11.** Convex body and short triangular collar rim. Similar to Erickson 2018, 224–225 fig. 200, no. 462; Forsén – Forsén 2003, 227–228, fig. 141 no. 314; Bollen 2011, 457, pl. 43 no. 212.

12 Pithos with Square Collar Rim [1286G1.2; Classical-Hellenistic] Fig. 4
Rest. Diam. 0.33. 7.5YR 7/8 (reddish yellow) to 5YR 7/1 (light gray). Hard. 30 % moderately sorted fine sand to coarse sand inclusions; frequent angular to subrounded pink and gray inclusions; few subrounded opaque white inclusions; rare subangular light brown inclusions; few angular to subrounded voids. Convex wall and wide square collar rim. Similar to Erickson 2018, 226–227 fig. 201 no. 469.

13 Pithos with Square Collar Rim [1286S.3; Classical-Hellenistic] Fig. 4
Rest. Diam. 0.55; max. P. dim. 0.37. 2.5YR 6/8 (light red) to 2.5YR 5/8 (red). Fabric as **12.** Convex body and wide square collar rim. Similar to Erickson 2018, 305 fig. 287 no. 702.

14 Pithos [259G.2; Classical-Hellenistic] Fig. 4
Rest. Diam. 0.13; Max. p. H. 0.078. 7.5YR 7/6 (reddish yellow) to 7.5YR 6/3 (light brown). Fabric as **12.** Solid round base with concave underside. Similar to Erickson 2018, 226 fig. 201 no. 471.

15 Lekanis Lid [1309G.20; Classical-Hellenistic] Fig. 5
Rest. Diam. 0.11. 5YR 7/6 (reddish yellow). Medium hard, with <2 % well-sorted fine sand inclusions; rare angular tabular opaque dark grey inclusions. 2.5Y 9/2 (very pale yellow) slip all over. Flaring wall and vertical tapered lip. Similar to Forsén – Forsén 2003, 214 fig. 137 no. 224; James 2018, 195 fig. 46 pl. 41 no. 344.

16 Perirrhanterion [1302G.13; Classical-Hellenistic] Fig. 5
Rest. diam. >0.9; max p. Dim. 0.127. 5YR 6/6 (reddish yellow). Hard. 33 % poorly-sorted fine sand to granule inclusions. Abundant rounded to subangular red inclusions; frequent subrounded to angular gray inclusions; frequent subrounded to angular white inclusions; common small to medium tabular and spherical voids. Rounded molded rim with exterior flaring ledge.

17 Knidian Amphora [4345S.3; Hellenistic] Fig. 5
Pres. H. 0.075. Surface: 2.5YR 7/8 (light red); Core 5YR 6/1 (Gray). Hard. 15–25 % moderately sorted fine to coarse sand inclusions. Common angular to subangular opaque and milky white and gray inclusions. Elongated toe with an applied ring. As Monakhov 1999, 168–169 figs. 11–12 Type II-E or II-G.

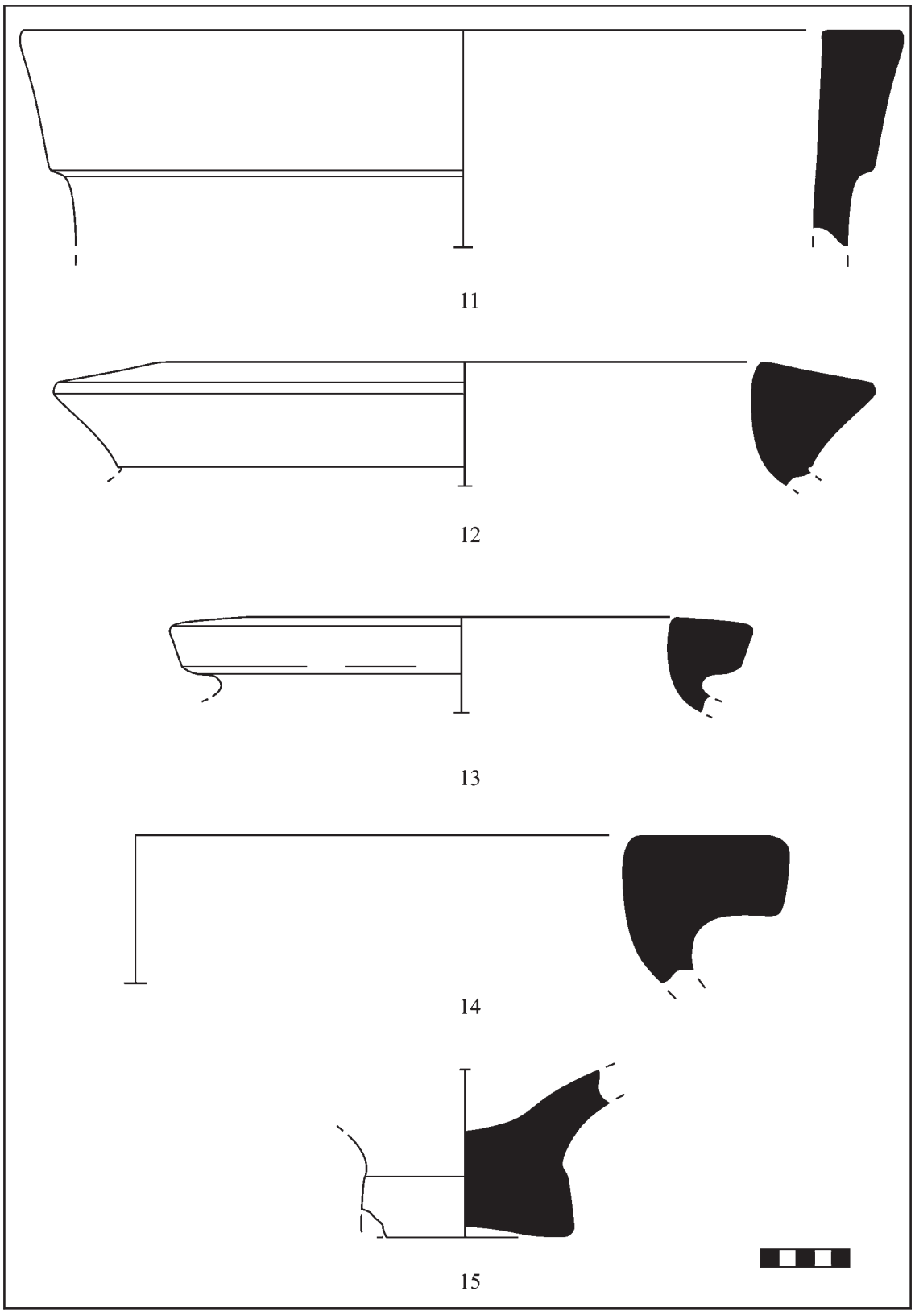

Figure 4: Classical-Hellenistic and Hellenistic Pithoi. Drawings by Christina Kolb.

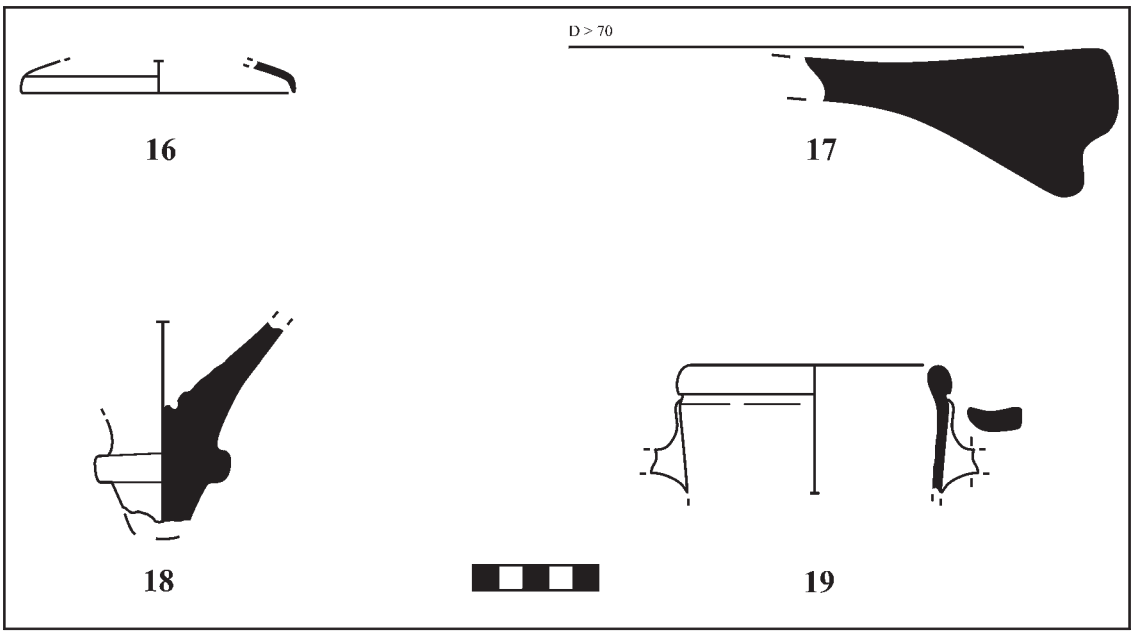

Fig. 5: Classical-Hellenistic and Hellenistic Miscellaneous Vessels and Transport Amphoras. 16) Lekanis Lid 17) Perirrhanterion 18) Knidian Amphora 19) Rhodian Amphora, Fractional. Drawings by Christina Kolb.

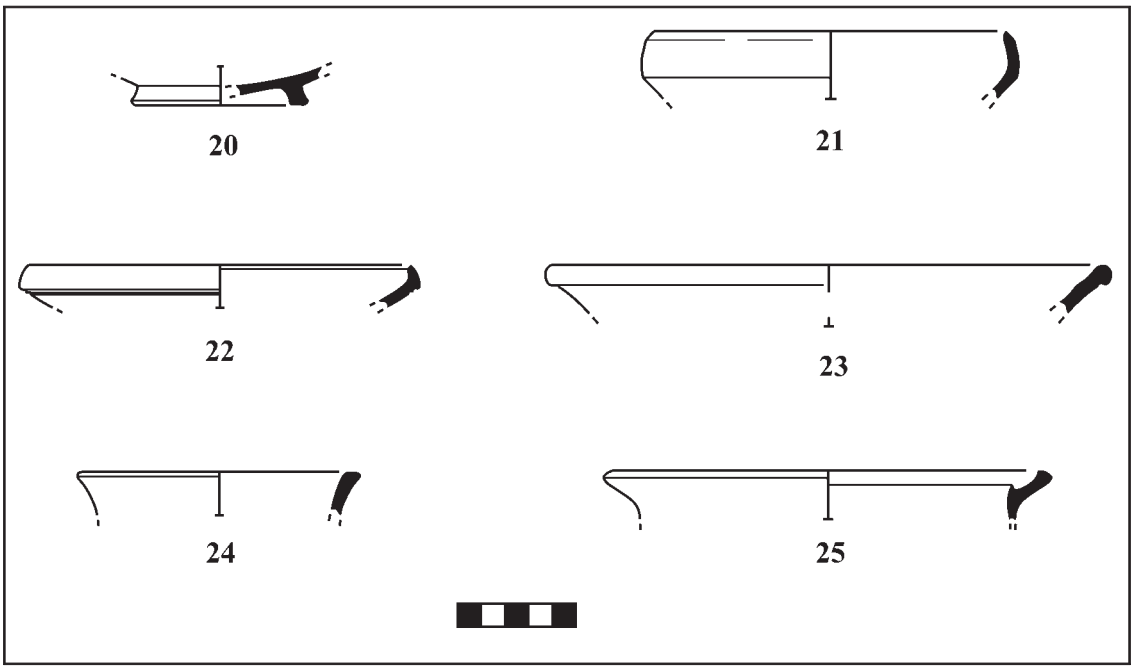

Fig. 6: Hellenistic to Early Roman Vessels. 20–21) ESA plate 22) ESB bowl 23) Rolled-rim plate 24) Unflanged stewpot 25) Casserole. Drawings by Christina Kolb.

18 Rhodian Amphora, Fractional [2333G.9; Hellenistic] Fig. 5
Rest. Diam. 0.06; Max p. dim. 0.053. No surface preserved. 10YR 8/2 (very pale brown). Soft, 2% well-sorted fine sand inclusions; Few white subrounded tabular and rounded spherical inclusions; Rare silver sparkling inclusions; few angular tabular voids. Vertical neck, strap handle attachment, and outward thickened rounded rim. Similar to Monakhov 2005, 74–78 figs. 2–3 Type 1B–1E.

Late Hellenistic-Early Roman and Early Roman

19 ESA Plate [2519R1.1; Late Hellenistic] Fig. 6
Rest. diam. 0.07. 2.5YR 6/6 (light red). Soft. 2–5 % well sorted fine sand inclusions, frequent subangular to subrounded white inclusions. Mottled light red (2.5YR 6/6) slip preserved on interior surface. Ring base and straight, flaring walls. As Hayes 1985, 14–15 pl. I, 7–8 (form 3).

20 ESA Plate [1309G.13; Late Hellenistic] Fig. 6
Rest. diam. 0.19; Max. p. dim. 0.03; Th. 0.004; Max. p. dim. 0.03. 10 YR 8/3 (very pale brown). Soft. 2–5 % well sorted fine sand inclusions, frequent subangular to subrounded white inclusions. Thin, brown (7.5YR 4/2) glaze preserved on interior and exterior. Flaring walls and inturned, rounded rim with tapered lip. As Hayes 1985, 15–16 pl. I, 9–12 (form 4).

21 ESB Bowl [1306G.15; Early Roman] Fig. 6
Rest. diam. 0.15; Th. 0.005; Max. p. dim 0.0195. 2.5YR 6/8 (light red). Soft. 10–15 % well sorted fine sand inclusions; abundant fine sparkling inclusions; few subangular white inclusions. Two shallow grooves preserved just the below rim on the exterior wall, both preserve faint traces of light red (10R 6/8) glaze. Flaring walls and inturned rim with tapered lip. As Hayes 1985, 64 pl. XIV, 5–6 (form 60).

22 Bowl with Outturned Rim [1301G.6; Hellenistic] Fig. 6
Rest. Diam. 0.12; Max. p. Dim. 0.23. Fabric as **1.** Convex flaring wall and outturned round rim. Similar to Erickson 2018, p. 345, no. 825, fig. 321; Rudolph 1978, pp. 216–217, no. 17 fig. 4; James 2018, 181 no. 228 fig. 31 pl. 25.
23 Rolled-Rim Plate [4345R2.20; Late Hellenistic-Early Roman] Fig. 6
Rest. diam. 0.24; Max. p. H. 0.22; Max. p. dim. 0.06. 10YR 8/3–4 (very pale brown). Soft. 2–5 % well sorted fine sand inclusions; few subangular to rounded white inclusions; few subangular to subrounded gray inclusions; rare fine sparkling inclusions. Groove at junction of lip and body. Convex body and a thickened, rounded lip. Similar to James 2018, 186 fig. 35 pl. 31 no. 272; James 2021, 337 fig. 6.7 no. 48.

24 Unflanged Stewpot [390G.1; Late Hellenistic-Early Roman] Fig. 6
Rest. diam. 0.11; Max. p. H. 0.018; Max. p. dim. 0.026 m. 5YR 5/4 (reddish brown). Hard. 15–25 % moderately sorted coarse sand to granule inclusions; abundant subangular to rounded red inclusions; few subrounded to rounded white inclusions; few fine sparkling inclusions; few subangular to subrounded gray inclusions. Globular body and a flaring rim with a slightly inward, beveled lip. Similar to Rotroff 2006, 303 fig. 71 pl. 61 no. 562.

25 Flanged Casserole [1272R2.8; Late Hellenistic-Early Roman] Fig. 6
Rest. diam. 0.19; Th. 0.007 m. Surface: 5YR 5/6 (yellowish red); Core: 5YR 4/1 (dark gray). Fabric as **24.** Flaring walls and outward thickened, flaring rim with a squared lip and sharp flange. Similar to Mitsopoulos-Leon 2017, 29 pl. 50 no. 213; James 2021, 338–339 figs. 6.10–11 no. 59–63; Slane 1990, 79–80 fig. 17 no. 168; Abadie-Reynal 2007, 209 pl. 54 no. 354.1.

Melanie Godsey
The University of North Carolina at Chapel Hill
mego0901@live.unc.edu

Machal Gradoz
The University of Michigan
mgradoz@umich.edu

References

Abadie-Reynal 2005 — C. Abadie-Reynal, Trade Relations in the Aegean Sea. The Ceramic Evidence from Argos between the 1st Cent. B. C. and the 2nd Cent. A. D., in: M. B. Briese – L. E. Vaag (eds.), Trade Relations in the Eastern Mediterranean from the Late Hellenistic Period to Late Antiquity. The Ceramic Evidence (Odense 2005) 37–49.

Abadie-Reynal 2007 — C. Abadie-Reynal, La céramique romaine d'Argos (Paris 2007).

Abadie-Reynal – Spyropoulos 1985 — C. Abadie-Reynal – Th. Spyropoulos, Fouilles à Helléniko (Eua de Spyropoulos 1985 Thyréatide), BCH 109/1, 1985, 385–454.

Ackermann 2019 — G. Ackermann, Deux cités de la «périphérie». Les répertoires céramiques d'Argos et d'Érétrie à la haute époque hellénistique, in: A. Peignard-Giros (ed.), Daily Life in a Cosmopolitan World. Pottery and Culture During the Hellenistic Period, Proceedings of the 2nd Conference of IARPotHP Lyon, November 2015, 5th–8th (Vienna 2019) 225–236.

Alcock 1993 — S. Alcock, Graecia Capta. The Landscapes of Roman Greece (Cambridge 1993).

Alexandropoulou 2016 — A. Alexandropoulou, A Fourth-Cent. Tomb at Argos. A Contribution to the Study of Local Pottery and Burial Customs, ABSA, 2016, 1–43.

Banaka-Dimaki 2004 — A. Banaka-Dimaki, Ταφικό σύνολο ελληνιστικών χρόνων από το Άργος, in: ΣΤ' πιστημονική Συνάντηση για την Ελληνιστική Κεραμική, Βόλος 2000 (Athens 2004) 393–408.

Bintliff 2008 — J. Bintliff, The Peloponnese in Hellenistic and Early Roman Imperial Times. The Evidence from Survey and the Wider Aegean Context, in: C. Grandjean (ed.), Le Péloponnèse d'Epaminondas à Hadrien. Colloque de Tours, 6–7 octobre 2005 (Paris 2008) 21–52.

Bollen 2011 — E. Bollen, Pottery, Lamps, and Miniatures from the Central Acropolis, in: S. Dietz – M. Stavropoulou-Gatsi (eds.), Kalydon in Aitolia (Athens 2011) 455–518.

Caraher et al. in prep	W. Caraher – S. Gallimore – S. James – D. Nakassis – A. Papadimitriou, The Fortifications of the Western Argolid (in prep).
Cloke 2016	C. Cloke. The Landscape of the Lion. Economies of Religion and Politics in the Nemean Countryside (800 B. C. to A. D. 700) (Ph. D. diss. University of Cincinnati, Cincinnati 2016).
Danali 1994	K. Danali, Η ελληνιστική κεραμική από το Πρόπυλο του "Γυμνασίου" στο Ασκληπιείο της Επιδαύρου, ArchEph 133, 1994, 255–298.
Dengate 1976	C. Dengate, A Group of Graves Excavated at Halieis, ArchDelt 31, 1976, Μελέτες, 274–324.
Erickson 2018	B. Erickson, Lerna. A Preclassical Site in the Argolid. The Historical Greek Village, Lerna 8 (Princeton 2018).
Forsén – Forsén 2003	J. Forsén – B. Forsén, The Asea Valley Survey. An Arcadian Mountain Valley from Paleolithic to Modern Times (Athens 2003).
Gallimore et al. 2017	S. Gallimore – S. James – W. Caraher – D. Nakassis, To Argos. Archaeological Survey in the Western Argolid, 2014–2016, in: D. W. Rupp – J. E. Tomlinson (eds.), From Maple to Olive. From Maple to Olive Proceedings of a Colloquium to Celebrate the 40th Anniversary of the Canadian Institute in Greece, Athens, 10–11 June, 2016 (Athens 2017) 421–438.
Given – Knapp 2003	M. Given – A. B. Knapp, The Sydney Cyprus Survey Project. Social Approaches to Regional Archaeological Survey (Los Angeles 2003).
Gregory 2004	T. E. Gregory, Less is Better. The Quality of Evidence from Archaeological Survey and Practical Proposals for Low-Impact Survey in a Mediterranean Context, in: E. Athanassopoulos – L. Wandsnider (eds.), Mediterranean Archaeological Landscapes. Current Issues (Philadelphia 2004) 15–36.
Hayes 1973	J. W. Hayes, Roman Pottery from the South Stoa at Corinth, Hesperia 42, 1973, 416–470.
Hayes 1985	J. W. Hayes, Sigillate orientali, in: Atlante delle forme ceramiche II. Ceramica fine Romana nel bacino Mediterraneo (tardo ellenismo e primo Impero), EAA Suppl. II (Rome 1985) 1–95.
James 2018	S. A. James, Hellenistic Pottery. The Fine Wares, Corinth 7, 7 (Princeton 2018).
James 2020	S. A. James, Rediscovering the Late Hellenistic-Early Roman Peloponnese. Analyzing Transitional Ceramic Assemblages found on Archaeological Surveys, HEROM. Journal on Hellenistic and Roman Material Culture 9, 2020, 327–352.
James 2021	S. A. James, Stratified Assemblages of the Rescue Excavations. The Hellenistic Ceramics, in Y. Lolos (ed.) The Urban Survey, Sikyon I, Meletemata 82 (Athens 2021) 315–362.
James et al. forthcoming	S. A. James – W. Caraher – S. Gallimore – D. Nakassis – G. Erny – R. Fernandez – J. Frankl – A. Friedman – M. Godsey – M. Gradoz, Landscape Histories and Terrestrial Networks: Results from the Western Argolid Regional Project, Hesperia (forthcoming).
Jameson et al. 1994	M. Jameson – C. Runnels – T. Van Andel, A Greek Countryside. The Southern Van Andel Argolid from Prehistory to the Present Day (Stanford 1994).
Kolia 2000	E. Kolia, Κλειστό σύνολο ελληνιστικής κεραμικής από το οικόπεδο 1. Κολιγλιάτη στο Άργος, in: Ε' Επιστημονική Συνάντηση για την ελληνιστική κεραμική, Χανιά 1997 (Athens 2000) 387–392.
McPhee – Pemberton 2012	I. McPhee – E. G. Pemberton, Late Classical Pottery from Ancient Corinth. Drain 1971–1 in the Forum Southwest, Corinth 7, 6 (Princeton 2012).
Mee – Forbes 1997	C. Mee – H. A. Forbes, A Rough and Rocky Place. The Landscape and Settlement History of the Methana Peninsula, Greece (Liverpool 1997).
Mitsopoulos-Leon 2017	V. Mitsopoulos-Leon, Hellenistische Häuser in Lousoi. Keramik und Kleinfunde aus den Grabungen 1983–1994, Sonderschriften des Österreichischen Archäologischen Institutes in Wien 55 (Vienna 2017).
Monakhov 1999	S. I. Monakhov, Towards a Typology of Knidian Amphoras of the 4th–2nd cent. B. C., in: V. Ju. Zuev (ed.), The Bosporan Phenomenon. Greek culture on the periphery of the ancient world (St. Petersburg 1999) 161–172.
Monakhov 2005	S. I. Monakhov, Rhodian Amphoras. Developments in Form and Measurements, in V. F. Stolba – L. Hannestad (eds.) Chronologies of the Black Sea Area in the Period Cent. 400–100 B. C. (Aarhus 1999) 69–95.
Moore 2008	R. S. Moore, A Decade Later. The Chronotype System Revisited, in: W. R. Caraher – L. Jones Hall – R. S. Moore (eds.), Archaeology and History in Roman, Medieval, and Post-Medieval Greece. Studies on Method and Meaning in Honor of Timothy E. Gregory (London 2008) 137–151.
Pemberton et al. 1989	E. G. Pemberton – K. W. Slane – C. K. Williams II, The Sanctuary of Demeter and Kore. The Greek Pottery, Corinth 18, 1 (Athens 1989).
Penttinen 2005	A. Penttinen, From the Early Iron Age to the Early Roman Times, in: J. Hjohlman – A. Penttinen – B. Wells (eds.), Pyrgouthi. A Rural Site in the Berbati Valley from the Early Iron Age to Late Antiquity. Excavations by the Swedish Institute at Athens, 1995 and 1997 (Stockholm 2005).

Pettegrew 2007	D. Pettegrew, The Busy Countryside of Late Roman Corinth. Interpreting Ceramic Data Produced by Regional Archaeological Surveys, Hesperia 71/4, 2007, 743–784.
Piérart 2004	M. Piérart, Argolis, in: M. H. Hansen – T. H. Nielsen (eds.), An Inventory of Archaic and Classical Poleis. An Investigation Conducted by The Copenhagen Polis Centre for the Danish National Research Foundation (Oxford 2004) 599–619.
Pikoulas 1995	G. A. Pikoulas, Οδικό Δίκτυο καί Άμυνα. Άπο την Κόρινθο στο Άργος καί την Αρκαδία, (Athens 1995).
Rotroff 1997	S. I. Rotroff, Hellenistic Pottery. Athenian and Imported Wheelmade Table Ware and Related Material, Agora 29 (Princeton 1997).
Rotroff 2006	S. I. Rotroff, Hellenistic Pottery. The Plain Wares, Agora 33 (Princeton 2006).
Rudolph 1984	W. Rudolph, Excavation at Porto Cheli and Vicinity, Preliminary Report, III. Excavations at Metochi 1970, Hesperia 43, 1974, 105–131.
Rudolph 1978	W. Rudolph, Hellenistic Fine Ware Pottery and Lamps from Above the House with the Idols at Mycenae, BSA 73, 1978, 213–234.
Rupp et al. 2017	D. W. Rupp – T. Carter – A. Charami – B. Burke – B. Burns – Z. Bonias – J. Y. Perreault – D. Nakassis – S. Gallimore – S. James – S. Karapanou – M. J. Haagsma, Fieldwork of the Canadian Institute in Greece in 2014, Museion 14/2, 2017, 173–195.
Rupp et al. 2018	D. W. Rupp – Z. Bonias – J. Y. Perreault – A. Charami – B. Burke – B. Burns – T. Carter – D. Nakassis – S. Gallimore – S. James – S. Karapanou – M. J. Haagsma – L. Surtees, Fieldwork of the Canadian Institute in Greece in 2015, Museion 15/2, 2018, 297–319.
Rupp et al. 2019	D. W. Rupp – Z. Bonias – J. Y. Perreault – A. Charami – B. Burke – B. Burns – T. Carter – D. Athanasoulis – D. Nakassis – S. Gallimore – S. James – S. Karapanou – M. J. Haagsma, Fieldwork of the Canadian Institute in Greece in 2016, Museion 16/2, 2019, 343–364.
Schilbach 1995	J. Schilbach, Elische Keramik des 5. und 4. Jahrhunderts, OF 23 (Berlin 1995).
Slane 1990	K. W. Slane, The Sanctuary of Demeter and Kore. The Roman Pottery and Roman Lamps, Corinth 18, 2 (Princeton 1990).
Stewart 2013	D. R. Stewart, Reading the Landscapes of the Rural Peloponnese. Landscape Change and Regional Variation in an Early 'Provincial' Setting (Oxford 2013).
Stone 2014	P. Stone, The Pottery of Building A, in: G. P. Schaus (ed.), The Acropolis Sanctuary, Stymphalos Volume I (Toronto 2014) 193–215.
Stone 2020	P. Stone, Surface Assemblages. The Hellenistic Period, in: Y. Lolos (ed.) The Urban Survey, Sikyon I, Melethmata 82 (Athens 2020) 218–233.
Tzavella 2020	E. Tzavella, Surface Assemblages. Early and Middle Roman Periods, in: Y. Lolos (ed.) The Urban Survey, Sikyon I, Melethmata 82 (Athens 2020) 234–269.
Villing – Pemberton 2010	A. Villing – E. G. Pemberton, Mortaria from Ancient Corinth. Form and Function, Hesperia 79, 2010, 555–638.
Whitbread 2011	I. K. Whitbread. Petrographic Analysis of Ceramics from the Berbati Valley, in: M. Lindblom – B. Wells (eds.), Mastos in the Berbati Valley. An Intensive Archaeological Survey (Stockholm 2011) 143–176.
Whitbread et. al. 2007	I. K. Whitbread – M. J. Ponting – B. Wells, Temporal Patterns in Ceramic Production in the Berbati Valley, Greece, JFieldA 32/2, 2007, 177–193.
Williams – Zervos 1983	C. K. Williams – O. H. Zervos, Corinth, 1982. East of the Theater, Hesperia 52/1, 1983, 1–47.



CERAMICA-Stiftung Basel

Editors in chief: Laura Rembart, Alice Waldner

Language editing: Sarah James (English), Guy Ackermann (French), Alice Waldner (Italian), Laura Rembart (German)

Layout: Roman Jacobek, Phoibos Verlag
Cover photo: Mould fragment of a relief bowl with potter's signature "MENEMACHOU", Ephesos (© ÖAW-ÖAI/Niki Gail)

Manuscript preparation, citations and abbreviations follow the Style Sheet of the German Archaeological Institute (DAI, 2015). Contents and illustration permissions (drawings, photos, reproductions and graphs) are the responsibility of the individual authors.

The printing of this publication was made possible by a generous grant received from the CERAMICA-Stiftung Basel.

© IARPotHP e. V. and the individual authors. All rights reserved.

Bibliografische Information der Deutschen Nationalbibliothek
Die Deutsche Nationalbibliothek verzeichnet diese Publikation in der Deutschen Nationalbibliografie; detaillierte bibliografische Daten sind im Internet über http://dnb.ddb.de abrufbar.

Bibliographic information published by Die Deutsche Nationalbibliothek
Die Deutsche Nationalbibliothek lists this publication in the Deutsche Nationalbibliografie; detailed bibliographic data is available in the Internet at http://dnb.ddb.de.

www.phoibos.at; office@phoibos.at
Printed in the EU: Prime Rate Kft., Megyeri út 53, H-1044 Budapest
ISBN 978-3-85161-276-9 (printed edition)
ISBN 978-3-85161-277-6 (E-book, PDF)

Contents

Preface by the Chair of the IARPotHP 9

Preface by the former Chair of the IARPotHP 11

Introduction and Acknowledgements 13

Topic 1: Ceramic Manufacturers and their Workshops from East to West

Verónica Martínez-Ferreras – Josep M. Gurt-Esparraguera – Anno Hein – Sara Carrión
Tableware for Symposia in Northern Bactria (Central Asia) 17

Marina E. Klemeshova – Georgy A. Lomtadze
Imitation of Greek Ceramics Imported from the Ancient Settlements of the Bosporus 35

Barak Monnickendam-Givon
Cooking Vessels Production in Southern-Phoenicia: A Selective Use 47

Cécile Harlaut
Vases de banquet, de culte (?), offrandes funéraires et urnes cinéraires. Nouvelles données pour un groupe de céramique peinte hellénistique d'Alexandrie et d'Égypte 65

Anne-Sophie Martz
A Delian / Cycladic Cookware Production? 81

Guy Ackermann
Pottery Production in Central Euboea during the Hellenistic Period 99

Konstantina Gravani – Dimitra Drosou
Amphorae from the Ancient Cassope, Epirus – Greece 111

Francesca Tomei
The Hellenistic Pottery Kilns from the *chora* of Metaponto: A Landscape Analysis to Understand Locational Choices and Networks of Distribution 127

Zoi Kotitsa
Shining Vessels: Transferring the Technology of Tin-foiled Pottery in the Mediterranean ... 141

Laura Ambrosini
Hellenistic Pottery from Lipari (Sicily) Imitating Metal Vases 161

Archer Martin – Albert Ribera i Lacomba
Black-Gloss Ware Produced at Pompeii. Finds from the Excavations of the Pompeii Archaeological Research Project: Porta Stabia 183

Ilaria Romeo – Alessia Contino – Lucilla D'Alessandro – Dario Panariti – Martina Rodinò
Nuovi dati sulla ceramica a vernice nera e le anfore della città romana di Cosa (Ansedonia, GR/Italia). Le indagini dell'Università di Firenze a Cosa: l'Edificio P 195

Custode Silvio Fioriello
Produzione ceramica in Puglia nell'età della romanizzazione 225

Topic 2: Aegaean Networks

George Koutsouflakis – Max Luaces – José Angel Zamora López – Antonio Manuel Sáez Romero
A Fresh Approach to Seaborne Trade and Maritime Connectivity Between the Levant and the Aegean in the Classical and Hellenistic Periods 241

John Lund
The Formative History of the Lagynos: Some Suggestions 255

Kostas Filis – Vivian Staikou
The Transport Amphorae from the Port Facilities of Ancient Leukas. Local/regional and Extra-regional Exchange Networks 263

Annette Peignard-Giros
Delos in an Eastern Mediterranean Roman Network in the 2nd–1st Centuries B. C. The Evidence from Pottery 279

Colette Kruyshaar – Karey A. Rodgers – Margriet J. Haagsma – Sophia Karapanou
"Phocaean" Cookware in Achaia Phthiotis (Thessaly) 289

Sergey Yu. Monakhov – Nataliya B. Churekova
Hellenistic Amphorae in the Project "Greek Amphorae from the Northern Pontus Euxinus (7th–2nd Century B. C.) – APE" 307

Topic 3: Local Economies in Light of Regional Connectivity and Identities

Gabriele Puschnigg
Sirvan Ceramics: Local Communities and Interregional Networks in the Central Zagros 317

Mariola Hepa
Funktionale Analyse und Kontextualisierung von Keramik aus einem ptolemäisch-römischen Tiergräberfeld in Syene/Oberägypten 329

Vincenzo Soría
The Story of an Ordinary Object: Italic Black Gloss Tableware in Portugal During the 2nd and the 1st Century B. C. 339

Francisco B. Gomes
Reconstructing Perfume Trade in Hellenistic Iberia: Ceramic Unguentaria and Other Perfume Vessels from the Late Iron Age to the Early Roman Period 351

Francisco José García Fernández – Antonio M. Sáez Romero
Almost Roman. Change and Persistence in the Table Wares of Southwestern Iberia after the Roman Conquest (2nd century B. C.) 365

Dario D'Orlando
From Urban to Rural: Trade and Production Between *Caralis* and its Hinterland (Sardinia, Italy) 383

Christine Pönitz-Hunziker
From the Table to the Grave (?). The Different Use of Ceramics in House and Grave Contexts in Crotone (Calabria) 395

Claudia Noferi
Terracotta Figurines in Hellenistic Grave Goods of the Southern Etruria: Meanings and Production Areas 405

Contents

Nadia Aleotti
Hellenistic "Corinthian type B" Amphorae from Butrint (Southern Albania): Reconsidering their Typology and their Role in the Regional Hellenistic Economy 411

Anna Gamberini
Ceramics for the Living and Ceramics for the Dead in Phoinike (Southern Albania) 427

Viktoriia Kotenko
Tauric Chersonesos Tableware on the Markets of the North-western Black Sea Region 437

Elena V. Kuznetsova – Sergey Y. Monakhov
Trade Connections of the Northern Black Sea Region in the Hellenistic Period (After Materials of Museum Collections) 447

Marcin Matera – Sergey Il'yashenko – Svetlana Naumenko
The Dynamics of the Development of Amphora Trade at Tanais in 3rd – 2nd Centuries B. C. 463

Alexandros Laftsidis
The Imitation Game: The Enduring Effects of Attic Pottery in the Hellenistic Times 475

Natacha Massar
Cretan Fine Wares in and out of Crete. Trade Patterns and Distribution Networks 495

Natalia Vogeikoff-Brogan
East Crete between Metellus and Octavian (67–31 BCE): The Case of Mochlos 517

Vyron Antoniadis – Georgia Pliakou
The Archaeology of "Dead Cities": Ceramic Evidence from Late Hellenistic and Roman Epirus 527

Elpiniki Naoum
Hellenistic pottery from the West Cemetery of Pella 545

Maria Nasioula
Ἀμφιδάμαντα δὲ Τηλέμαχος. The Killing of the Suitors on *Grammatika Vases* 559

Efstathios Raptou
"Macedonian Type" Amphorae from Western Cyprus (Paphos Region) 569

Melanie Godsey – Machal Gradoz
Pottery from Orneai in the Western Argolid (4th cent. BCE – 2nd cent. CE) 581

Regina Klöckl
Zu einigen Reliefbechern aus Pheneos, Arkadien 595

Dries Daems – Jeroen Poblome
The Hellenistic Pottery of Sagalassos: A Typological Update 607

Vasilica Lungu
Labraunda: économie locale et contacts régionaux à l'époque hellénistique. La contribution des trouvailles céramiques 619

Ivanka Kamenjarin
Ceramic Cult Objects from Siculi, Croatia 631

Topic 4: Defining a Market. Widespread Distribution of Goods as »Globalisation« Markers ?

Max Luaces
Defining a Market in Antiquity: Beyond the Ceramic and Commodity Exchange 639

Nadezhda Novoselova – Maria Akhmadeeva
A Hellenistic Pottery Deposit from the "Archelaos" Household of Tauric Chersonessos: Evidence for Globalization 653

Emanuele Taccola
Pisa, Piazza del Duomo. The Hellenistic Pottery as Commercial and Economic Indicator of the Northern Coastal Etruria 667

Carlo De Mitri
Commercial Product, Personal Property or Gift? A Few Case Studies in the Ionian-Adriatic Area 683

Jeyhun Eminli
Pottery Production in Qabala – The Capital City of Caucasian Albania in the Hellenistic and Roman Periods 695

Fabienne Olmer
Amphorae and Hellenistic Products in the Western Celtic World Before the Roman Conquest: Opportunism or Economic Contacts? 709

Violeta Moreno Megías
Fragments of *luxuria*. The Role of Amphorae in the Consumption of Fish Products in Republican Rome 723

Sarah A. James
New Analyses of Hellenistic B-type Amphorae from Corinth 733

Guillermo Pascual – Georgia Pliakou
Transport Amphorae from the Late Hellenistic Farmstead of Episkopi, Ioannina 747

Philip Bes – Jeroen Poblome
First Observations on Hellenistic Amphorae at Kinet Höyük 759

Antonio Sáez Romero – M. Reyes López Jurado
Ceramic Unguentaria from the Bay of Cádiz (Spain) in the 3rd–1st Centuries B. C. A Review of Their Typological Evolution and Function 769

Antonio Manuel Poveda Navarro – Paola Puppo
Nuovi dati sulla diffusione della ceramica ellenistica a rilievo nelle Isole Baleari (Spagna) . . . 781

Susan I. Rotroff
An Italian in Arcadia? Moldmade Bowls of Italian Type at Mount Lykaion 793

Sandra Mermelstein
Off to Market: The Production and Movement of Hellenistic Moldmade Relief Bowls (MMBs) in the Southern Levant 805

Stanislav Zadnikov – Iryna Shramko
Rhodian Amphora from Lutishche and the Question of Greek Imports of the Hellenistic Period in the Forest-steppe Scythia 813

Publications of IARPotHP e. V.

Sarah Japp – Patricia Kögler (eds.), Traditions and Innovations. Tracking the Development of Pottery from the Late Classical to the Early Imperial Period. Proceedings of the 1st Conference of IARPotHP Berlin, November 2013, 7th–10th, IARPotHP 1 (Wien 2016)

Annette Peignard-Giros (ed.), Daily Life in a Cosmopolitan World. Pottery and Culture during the Hellenistic Period. Proceedings of the 2nd Conference of IARPotHP, Lyon, November 2015, 5th – 8th, IARPotHP 2 (Wien 2019)

Ivanka Kamenjarin – Marina Ugarković (eds.), Exploring the Neighborhood. The Role of Ceramics in Understanding Place in the Hellenistic World. Proceedings of the 3rd Conference of IARPotHP, Kaštela, June 2017, 1st – 4th, IARPotHP 3 (Wien 2020)

Laura Rembart – Alice Waldner (eds.), Manufacturers and Markets. The Contributions of Hellenistic Pottery to Economies Large and Small. Proceedings of the 4th Conference of IARPotHP, Athens, November 2019, 11th–14th, IARPotHP 4 (Wien 2022)